CHAPTER 3

DIFFERENTIAL AMPLIFIERS

***Introduction:** the common and the differential mode components of two voltages*

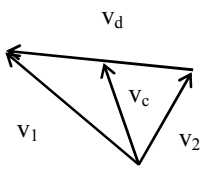

differential mode component: $v_d = v_1 - v_2$

common mode component: $v_c = \frac{v_1 + v_2}{2}$

with these: $v_1 = v_c + \frac{v_d}{2}$

$v_2 = v_c - \frac{v_d}{2}$

(Remark: the same definitions are valid for DC as well.)

With these the linear system of equations describing the linear operation of differential amplifiers:

$$v_{od} = A_{vdd}\, v_{ind} + A_{vdc}\, v_{inc}$$
$$v_{oc} = A_{vcd}\, v_{ind} + A_{vcc}\, v_{inc}$$

Target: as high A_{vdd} as possible. Quality factors for this:
- discrimination factor

$$D = \frac{A_{vdd}}{A_{vcc}}$$

- CMRR = Common Mode Rejection Ratio

$$CMRR = \frac{A_{vdd}}{A_{vdc}}$$

Single ended differential amplifier (symmetrical input, asymmetrical output):

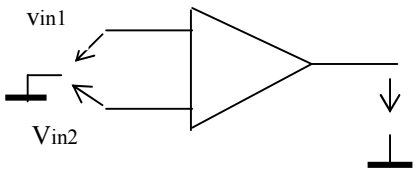

$v_o = A_{vd}\, v_{ind} + A_{vc}\, v_{inc}$

Here, the CMRR definition:

$$CMRR = \frac{A_{vd}}{A_{vc}}$$

Basic connection of the differential amplifier

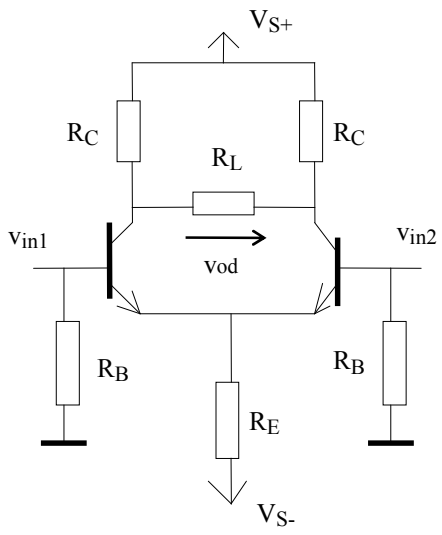

a) *Pure differential mode input* ($v_{inc} = 0$ and $v_{in1} = -v_{in2}$)

The equal magnitude but opposite phase current changes cancel each-other on R_E, therefore the potential of the common E point does not change - virtual ground. Because of the symmetry the electrical middle point of the load resistance neither does change - this also a virtually grounded point. From the aspect of one of the transistors the situation on AC is the following:

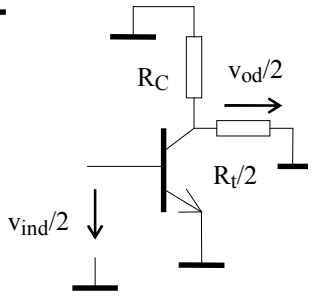

According to this the differential-differential voltage gain by means of the gain formula of the CE stage ($g_{22} \cong 0$):

$$A_{vdd} = -g_{21}(R_C x \frac{R_L}{2})$$

Due to the symmetry, the differential input does not result a common output voltage:

$A_{vcc} = 0$

b) *Pure common input*: ($v_{ind} = 0$, $v_{in1} = v_{in2} = v_{inc}$)

Now the equal current changes flow together through R_E, therefore from the aspect of one transistor the situation is such as if R_E had double value. Due to the symmetry the collectors remain equipotential, no current flows through R_L as if it were an open circuit. Therefore the equivalent circuit for one transistor now:

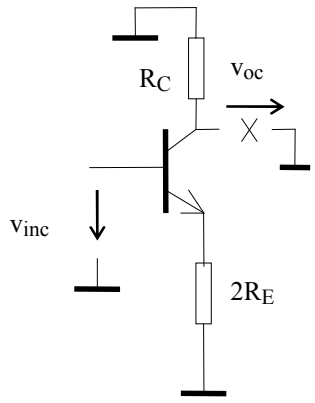

The voltage gain referring to the common output due to the common input can be calculated as the gain of the CE stage with a 'degenerated' transistor:

$$A_{vcc} = -\frac{g_{21}R_C}{1 + g_{21}2R_E}$$

Because of the symmetry there is no differential mode output voltage:

$A_{vdc} = 0.$

The quality factors:

$$D = (1 + g_{21}R_E)\left(\frac{R_C x \frac{R_L}{2}}{R_C}\right)$$

$CMRR = \infty$

(Practice)

Numeric example #1

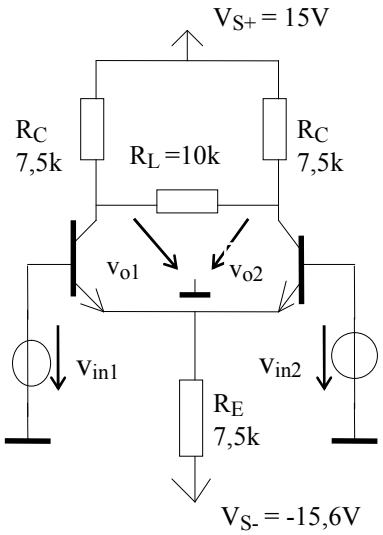

Problem: $v_{in1} = 1{,}005$ V and $v_{in2} = 0{,}995$ V

How much are the voltages v_{o1} and v_{o2} ?

Solution: (observe DC input coupling)

a) Op. point: $I_{C0} = 1$ m A,

$V_{C0} = 7.5$ V (collector potentials)

To this belongs $g_{21} = 38$ mS.

b) Input voltage components:

$v_{ind} = 0{,}01$ V

$v_{inc} = 1$ V

c) Gains ($g_{22} = 0$) :

$$A_{vdd} = -\, g_{21}(R_C \times \frac{R_L}{2}) = -114$$

With this: $v_{od} = -1{,}14$ V

$$A_{vcc} \cong -\frac{R_C}{2R_E} = -0.5$$

With this: $v_{oc} = -\,0{,}5$ V

d) Output voltages:

- Regarding only the change of the collector potentials:

$v_{o1} = -\,0.5*1{,}14 - 0{,}5 = -\,1{,}07$ V

$v_{o2} = +\,0.5*1{,}14 - 0{,}5 = 0{,}07$ V

- Voltages that can be measured between the output points and ground:

$V_{o1} = 7{,}5 - 0.5*1{,}14 - 0{,}5 = 6{,}43$ V $(V_{C0} + 0.5v_{0d} + v_{0C})$

$V_{o2} = 7{,}5 + 0.5*1{,}14 - 0{,}5 = 7{,}57$ V $(V_{C0} - 0.5v_{0d} + v_{0C})$

End of class 6.

Common mode rejection in case of asymmetry

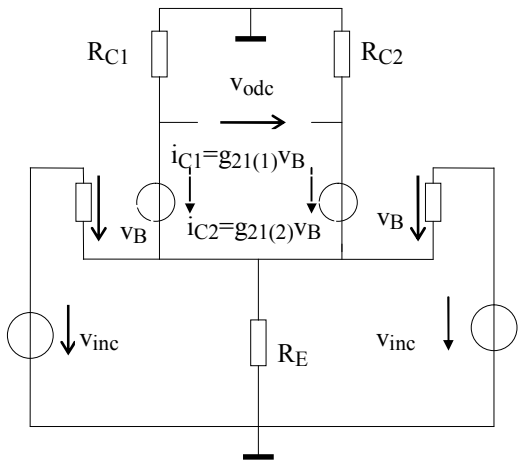

Conditions: $R_g = 0$, $R_L = \infty$ and $g_{22} = 0$.

Notations:

$\Delta R_C = R_{C1} - R_{C2}$ $\quad \Delta g_{21} = g_{21(1)} - g_{21(2)}$

$R_C = 0.5(R_{C1}+R_{C2})$ $\quad g_{21} = 0.5(g_{21(1)}+g_{21(2)})$

The differential mode output voltage generated by the pure common mode input voltages:

$v_{odc} = i_{C2} R_{C2} - i_{C1} R_{C1} =$

$= v_B [(g_{21} - 0.5*\Delta g_{21})(R_C - 0.5*\Delta R_C) -$

$- (g_{21} + 0.5*\Delta g_{21})(R_C + 0.5*\Delta R_C)] =$

$= -v_B (R_C \Delta g_{21} + \Delta R_C g_{21})$

Expressing v_B by v_{inc}:

$v_B = v_{inc} - 2g_{21} v_B R_E$

from where:

$$v_B = \frac{v_{inc}}{1 + 2g_{21}R_E}$$

The common to differential gain:

$$A_{vdc} = \frac{v_{0dc}}{v_{inc}} = -\frac{g_{21}R_C\left(\frac{\Delta g_{21}}{g_{21}} + \frac{\Delta R_C}{R_C}\right)}{1 + 2g_{21}R_E}$$

Since $-g_{21} R_C = A_{vdd}$, the common mode rejection:

$$CMRR = \frac{A_{vdd}}{A_{vdc}} = \frac{1 + 2g_{21}R_E}{\frac{\Delta g_{21}}{g_{21}} + \frac{\Delta R_C}{R_C}}$$

Versions of circuit arrangement

a) For the sake of large CMRR (and D) the realisation of a large R_E

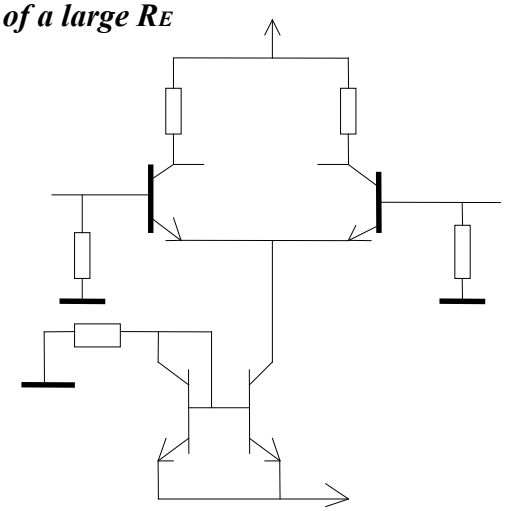

b) Using E-degeneration to stabilise the gain (by reducing it)

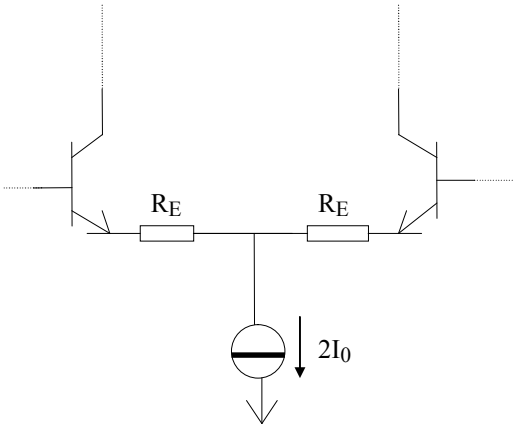

Here: $g_{21}^{*} = \dfrac{g_{21}}{1 + g_{21} R_E}$

c) Trans-conductance amplifier

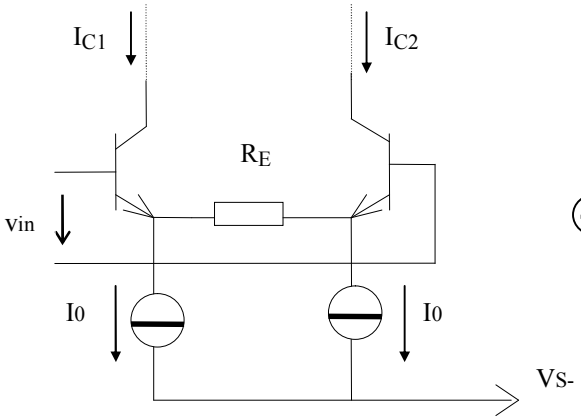

$$I_{C1} = I_0 + \frac{v_{in}}{R_E};$$

$$I_{C2} = I_0 - \frac{v_{in}}{R_E}$$

One of the collectors is used as a current output. If both are used, then the output signal is the difference of the two collector currents ($2\dfrac{v_{in}}{R_E}$): this is decided by the (not shown) connection receiving the currents.

d) Differential amplifier with symmetric output

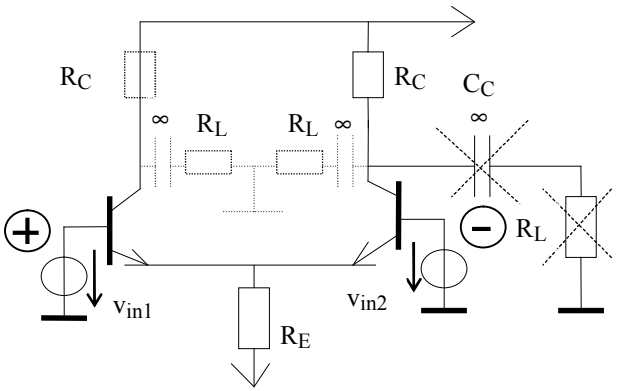

The connection can be retraced to the original one (see dashed lines).

So: $v_o = A_{vd}\, v_{ind} + A_{vc}\, v_{inc}$

$A_{vd} = -\,0.5 A_{vdd} = 0.5 g_{21} (R_C \times R_L)$

$$A_{vc} = A_{vcc} = -\frac{g_{21}(R_C x R_L)}{1 + 2 g_{21} R_E}$$

The notion of inverting and non-inverting inputs.

e) Two-stage differential amplifier with direct coupling

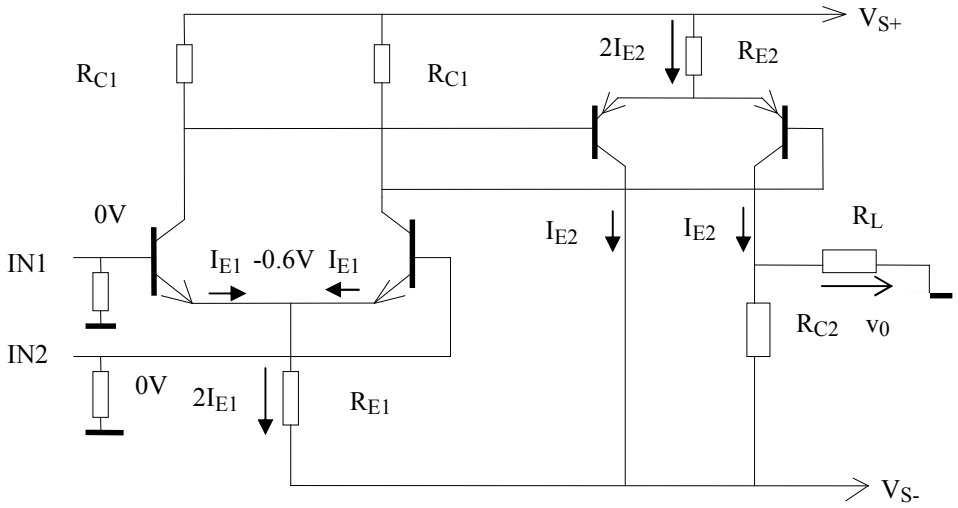

Supposing that $I_B \approx 0$, find the necessary value of R_{C2} to get direct output coupling.

$$I_{E1} = \frac{1}{2} \cdot \frac{-0.6 - V_{S-}}{R_{E1}}$$

$$I_{E2} = \frac{1}{2} \cdot \frac{I_{E1} R_{C1} - 0.6}{R_{E2}}$$

$$R_{C2} = \frac{-V_{S-}}{I_{E2}}$$